JBL Incorporated, 8500 Balboa Boulevard, P.O. Box 2200, Northridge, California 91329 U.S.A.

Technical Manual

JBL VRX915M

SPECIFICATIONS

ACOUSTIC & ELECTRICAL SPECIFICATIONS:

- Frequency Response: 70 Hz – 20 kHz (±3 dB)
- Frequency Range: 60 Hz – 20 kHz (–10 dB)
- Power Rating: Passive (Contin. / Prog / Peak) 800W / 1600W / 3200W, 2 hrs; 600W / 1200W / 2400W, 100 hrs
- Power Rating: Bi-Amp LF: (Contin. / Prog / Peak) 800W / 1600W / 3200W, 2 hrs; 600W / 1200W / 2400W, 100 hrs
- Power Rating: Bi-Amp HF: (Contin. / Prog / Peak) 75W / 150W / 300W, 2 hrs
- Max. SPL: 127 dB SPL continuous (133 dB SPL peak)
- Coverage Pattern: 50° x 90° nominal
- Crossover Modes: Passive / Bi-amp
- Crossover Frequency: 1.1 kHz

TRANSDUCER SECTION:

- Cabinet: Enclosure (Not For Sale)
- Grille: 362415-001
- Low Frequency Transducer: 2265HPL, 380 mm (15 in) Differential Drive woofer
- DC Resistance: 4.1 ohms ±8%
- High Frequency Transducer: 2452H, 100 mm (4 in) diameter voice coil, 38 mm (1.5 in) exit, neodymium magnet compression driver
- DC Resistance: 4.0 ohms ±8%
- Crossover Network 363140-002

AURAL SWEEP TEST SPECIFICATIONS:

A. System Aural Sweep Test: 10.0V Input, 20 Hz to 20 kHz
B. L.F. Aural Sweep Test: 15.0V Input, 10 Hz to 100 kHz
C. H.F. Aural Sweep Test: 2.5V Input, 300 Hz to 20 kHz

PHYSICAL SPECIFICATIONS:

- Enclosure Dimensions: (H x W x D) 629 x 432 x 324 mm D (375 mm stage height); 24.75 x 17.0 x 12.75 in. D (14.75" stage height)
- Net Weight: 46.0 lb (21.0 kg.)

WARRANTY INFORMATION:

- Refer to Warranty Statement packed with each product.

PACKAGE

Warranty 59660

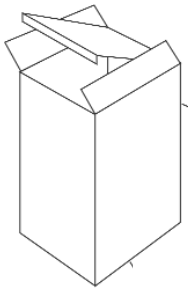

Manual
353551-007

Carton
362512-001

Filler (2)
362513-001

WIRING DIAGRAM

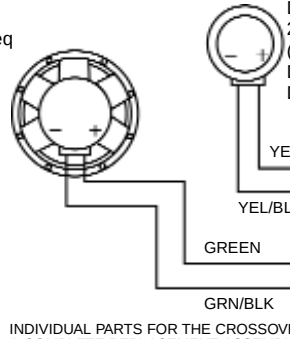

NOTE: INDIVIDUAL PARTS FOR THE CROSSOVER ARE NOT AVAILABLE. A COMPLETE REPLACEMENT ASSEMBLY SHOULD BE ORDERED.

SCHEMATIC: 363140-002

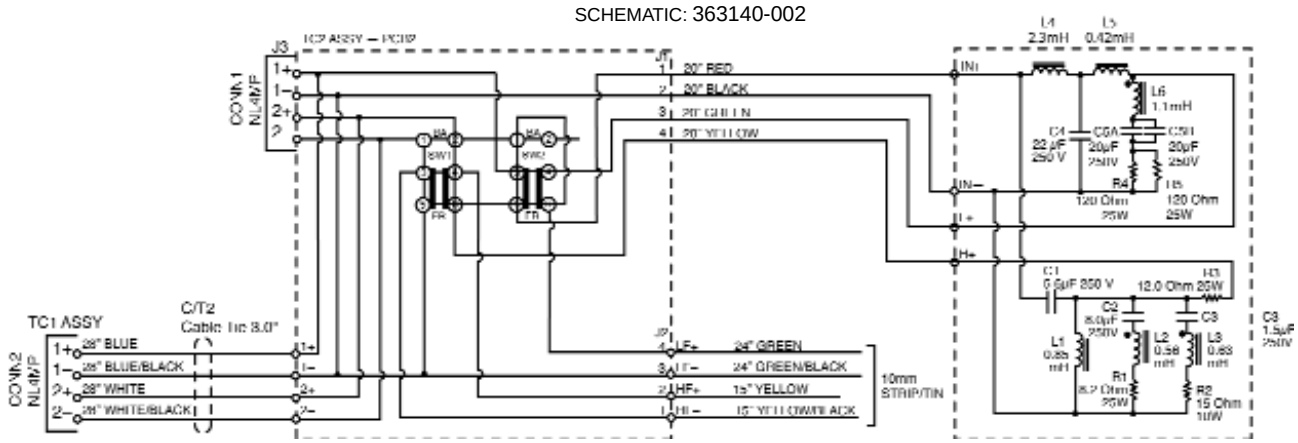

JBL VRX915M REV H

COMPONENT EXPLODED VIEW

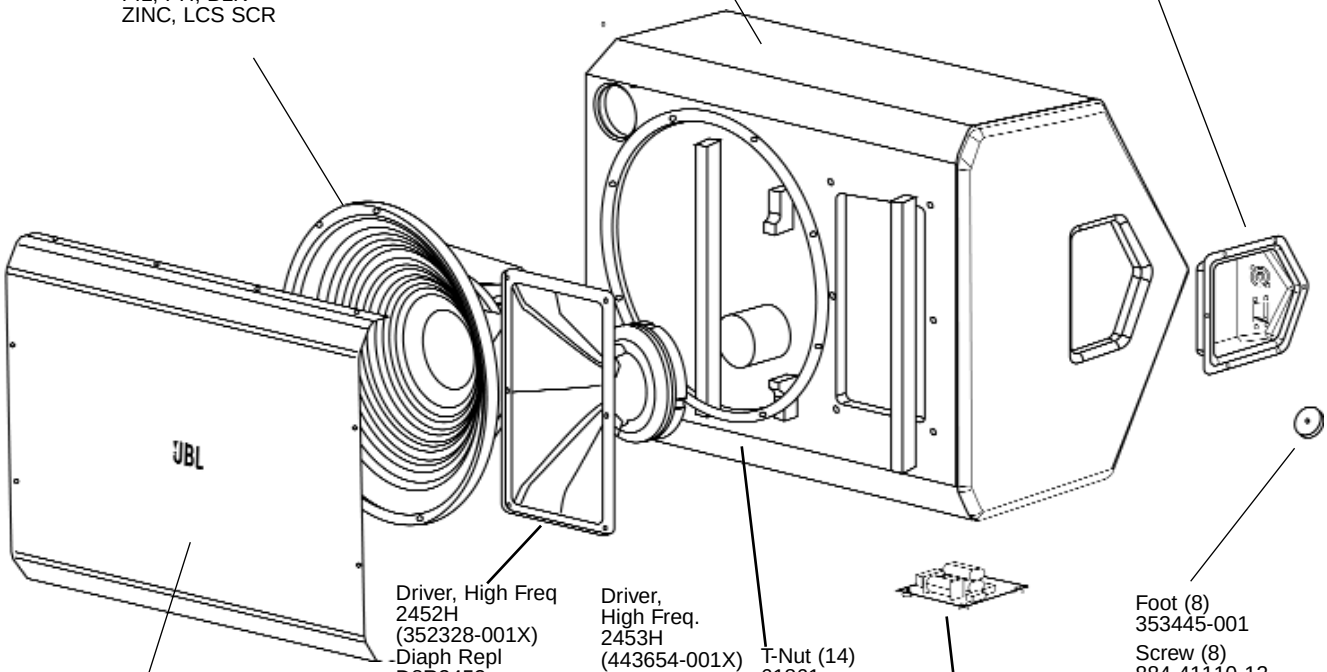

Driver, Low Freq
2265HPL
(338343-003X)
Cone Repl
C8R2265

Gasket
360-70002-01
Rear 15”

Screw (8)
804-01110-16
10-32 x 1
FIL, PH, BLK
ZINC, LCS SCR

Enclosure Assembly VRX915M
(Not Available for Sale)

Input Cup/Network Assembly
363140-001

Screw (12)
882-41110-10
6 x 5/8
PAN, PH, PB, BLK ZINC, LCS

Kurly-Lok
925-00005-01

Driver, High Freq
2452H
(352328-001X)
Diaph Repl
D8R2452

Horn
353299-001

Gasket
353616-002

Screw (6)
804-41110-16
10-32 x 1
PAN, PH,BLK
ZINC, LCS

Screw (2)
806-73004-10
1/4-20 x 5/8
SOC C/S ALY ZINC,
CLR

Sticker (2)
337882-001

Washer (2)
844-03100-03
1/4, SPLIT, REG,
CLR ZC, LCS

Driver,
High Freq.
2453H
(443654-001X)
2453H
Diaph Repl
D8R2453
Starting SN#
PO563-21949
9/6/2011

T-Nut (14)
61861
10-32 x 7/16
STEP BARREL
T-NUT

Foot (8)
353445-001

Screw (8)
884-41110-12
10 x 3/4
PAN, PH, PB,
BLK ZINC, LCS

Grille Assembly
362514-001

Screw (12)
882-51110-12
6 x 3/4
OV, PH, PTCL,
BLK ZINC, LCS

Input Cup/Network Assembly
363140-002

Screw (4)
882-41110-10
6 x 5/8
PAN, PH, PB, BLK
ZINC, LCS