JBL Incorporated, 8500 Balboa Boulevard, P.O. Box 2200, Northridge, California 91329 U.S.A.

Technical Manual

JBL8216 FOREGROUND MUSIC SYSTEMS

SPECIFICATIONS

ACOUSTIC & ELECTRICAL SPECIFICATIONS:

- Nominal Impedance: 8 ohm
- Power Capacity: 60W
- Frequency Range: 60 Hz to 14 kHz (±5 dB)
- Sensitivity: 87 dB SPL*
- Crossover Frequencies: 4 kHz

SYSTEM COMPONENTS:

- Cabinet: C8216
- Grille: G216
- Low Frequency Transducer: 165mm (6.5 in.) Cone Transducer (306G-2)

*1 Watt (2.83 V RMS) @ 1 Meter

SYSTEM COMPONENTS: *(cont'd)*

- High Frequency Transducer: 25mm (1 in.) Dome Radiator (010)
- Crossover Network: N8216

PHYSICAL SPECIFICATIONS:

- Enclosure Dimensions: 375mm x 254mm x 245mm D (14.75 x 10.0 x 9.25 in. D)
- Shipping Weight: 21 lbs. (9.6 kg)

WARRANTY INFORMATION:

- Refer to the Warranty Statement packed with each product.

PACKAGE

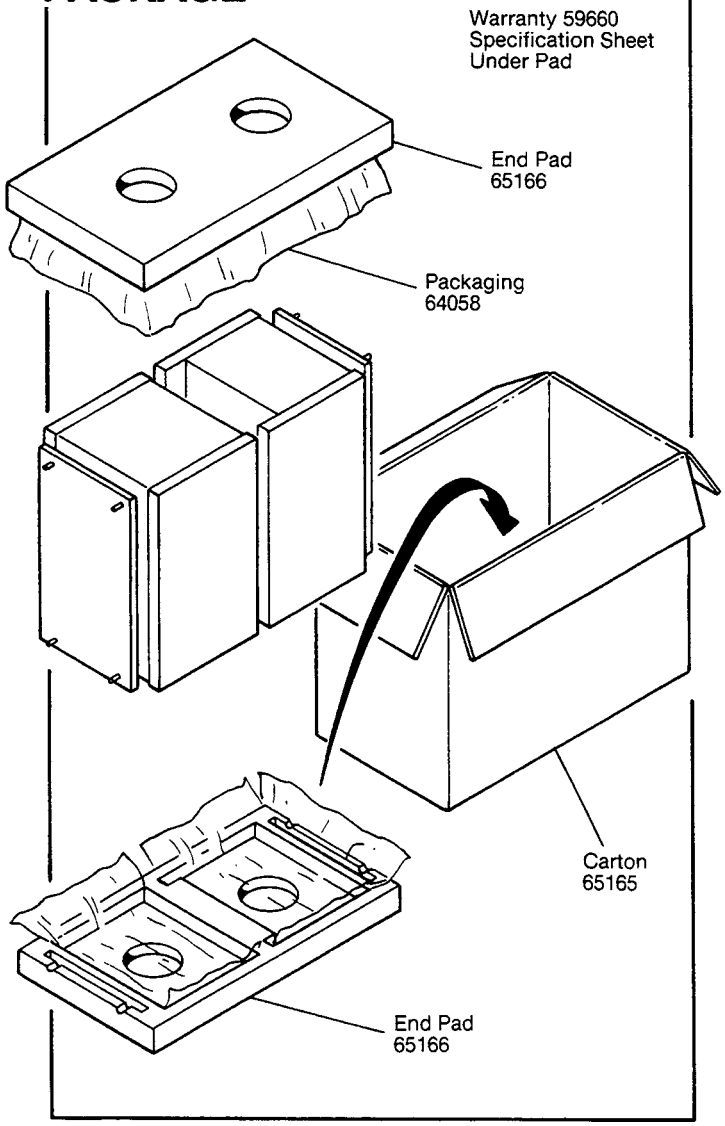

WIRING DIAGRAM

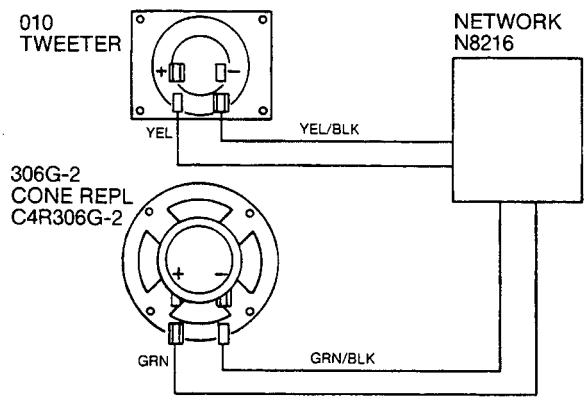

SCHEMATIC N8216

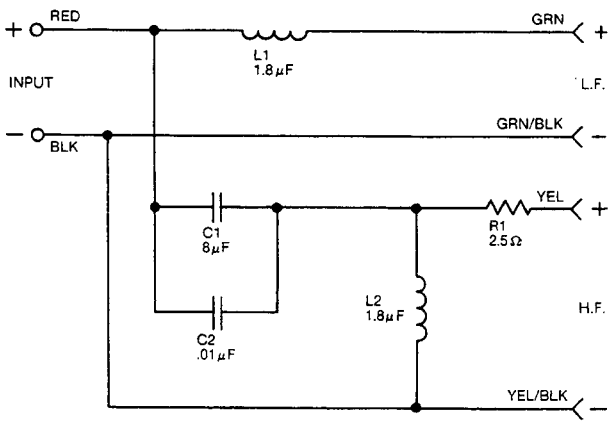

NOTE: INDIVIDUAL PARTS FOR THE ABOVE CROSSOVER ARE NOT AVAILABLE. A COMPLETE REPLACEMENT ASSEMBLY SHOULD BE ORDERED.
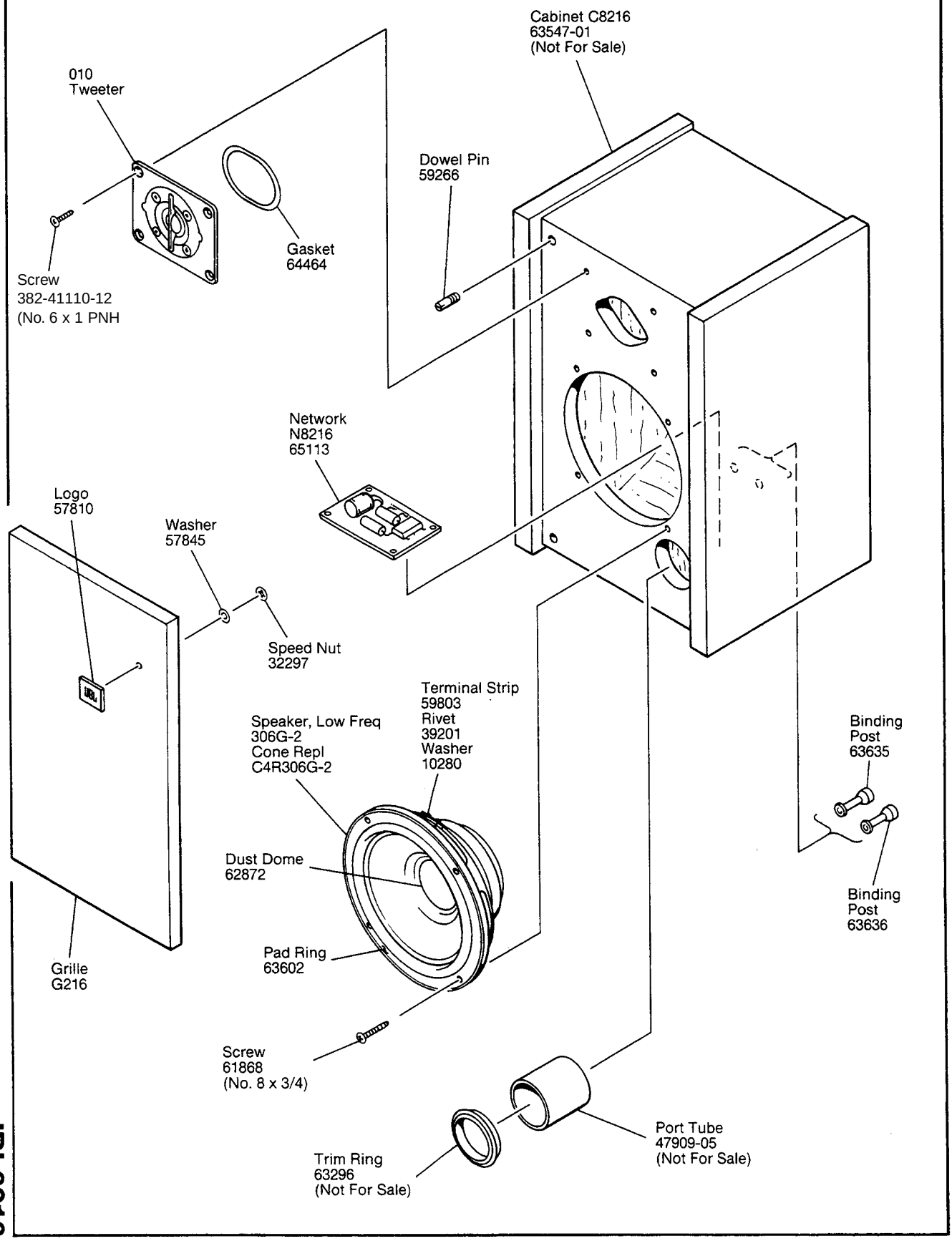
COMPONENT EXPLODED VIEW