JBL Incorporated, 8500 Balboa Boulevard, P.O. Box 2200, Northridge, California 91329 U.S.A.

Technical Manual

JBL SR4725X

SPECIFICATIONS

ACOUSTIC & ELECTRICAL SPECIFICATIONS:

- Nominal Impedance: 8 ohms
- Power Capacity: 600W Continuous Pink Noise
- Frequency Range: 35 Hz – 18 kHz (–10dB)
- Sensitivity: 97 dB SPL, 1 Watt @ 1 Meter
- Crossover Frequency: 1.1 kHz

SYSTEM COMPONENTS:

- Cabinet: SR4725X (Not For Sale)
- Grille: 128-00416-00
- Low Frequency Transducer: 380mm (15 in.) Paper Cone Transducer (2226HPL)
- DC Resistance: 5.0 ohm ±10% Aluminum Wire
- High Frequency Transducer: 25mm (1 in.Exit) Pure Titanium Compression Driver (2426H)
- DC Resistance: 3.2 ohm ±8% Aluminum Wire

SYSTEM COMPONENTS: *(Cont'd)*

- Crossover Network: 129-20058-00

AURAL SWEEP TEST SPECIFICATIONS:

A. System Aural Sweep Test: 7.0V Input, 20 Hz to 20 kHz
B. L.F. Aural Sweep Test: 14.5V Input, 20 Hz to 1.2 kHz
C. H.F. Aural Sweep Test: 2.0V Input, 550 kHz to 20 kHz

PHYSICAL SPECIFICATIONS:

- Enclosure Dimensions: 749mm x 635mm x 460mm D (29.5 x 25.0 x 18.0 in. D)
- Shipping Weight: 87 lbs. (39.4 kg.)

WARRANTY INFORMATION:

- Refer to Warranty Statement packed with each product.

PACKAGE

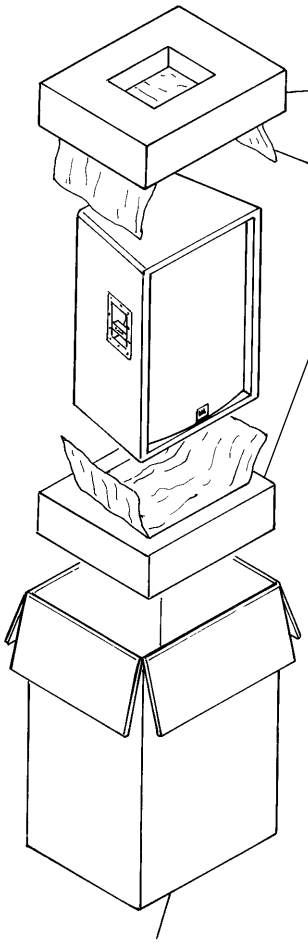

WIRING DIAGRAM

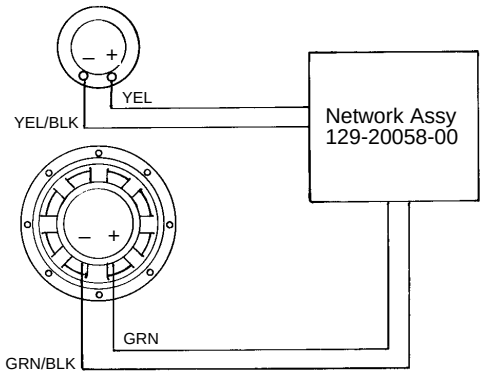

SCHEMATIC (129-20058-00)

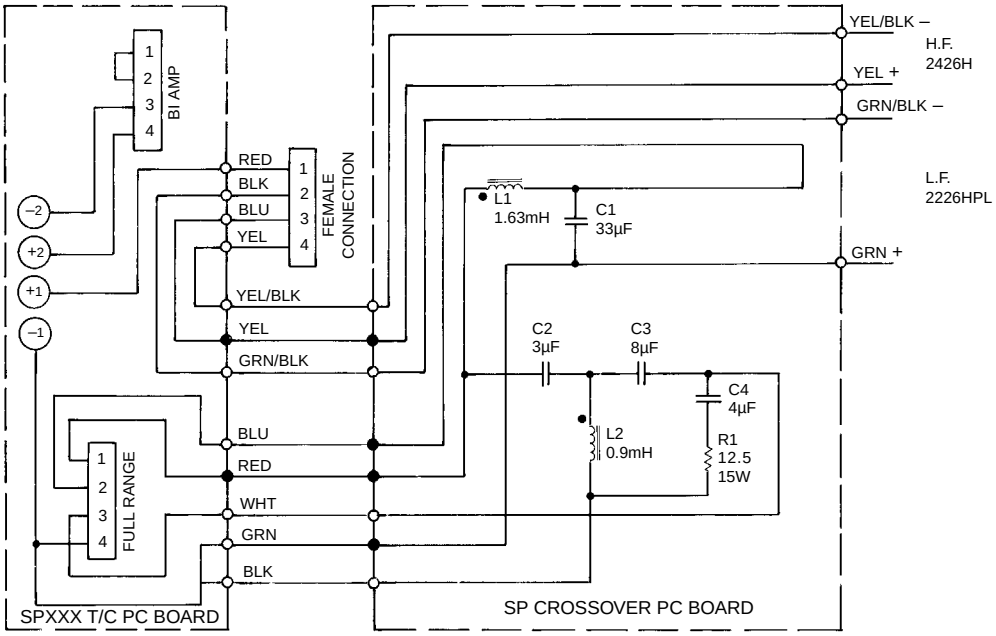

JBL 4725X REV H

JBL SR4725X
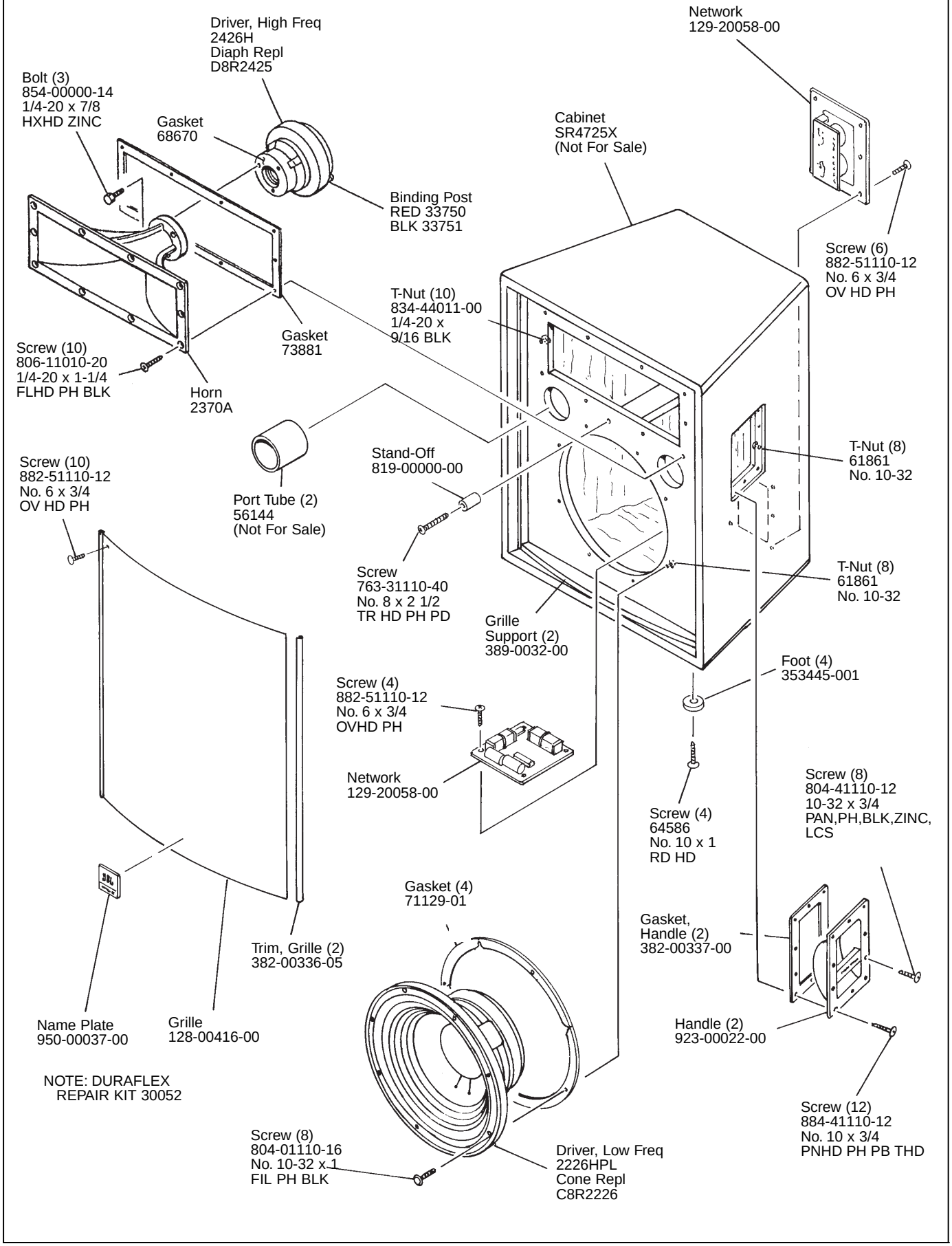
COMPONENT EXPLODED VIEW