THESE DRAWINGS AND SPECIFICATIONS ARE THE PROPERTY OF HARMAN SPEAKER MANUFACTURING. THEY ARE ISSUED IN STRICT CONFIDENCE AND SHALL NOT BE REPRODUCED, COPIED OR USED AS THE BASIS FOR MANUFACTURING OR SALE OF APPARATUS WITHOUT WRITTEN PERMISSION.

PART NO.	REV	DESCRIPTION	REMARKS
75963	B	NETWORK ASSY	SR4722A
75963-01	B	P.C.B	SR4722A
75963-02	B	TERMINAL CUP	SR4722A

REVISIONS

CHG	LTR	DESCRIPTION	DRFT	CHK	DA.	PPR
F-1117	A	RELEASE FOR PRODUCTION	PME	DHR	5/21/93	DHR
541T	B	ADDED NOTE 14	VAL			

NSR4722A

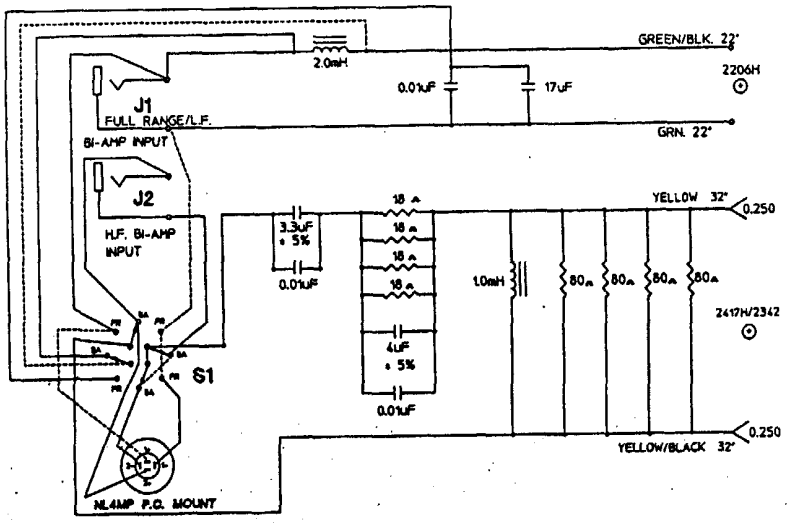

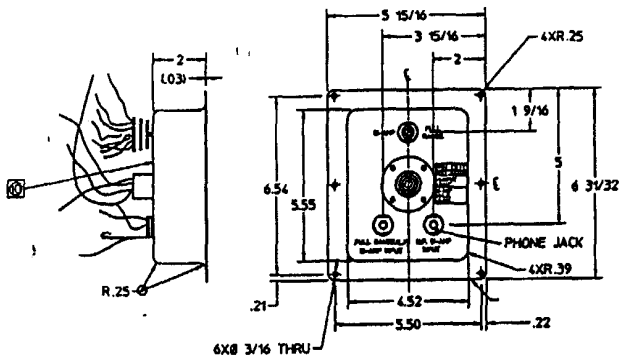

75963-02
TERMINAL CUP

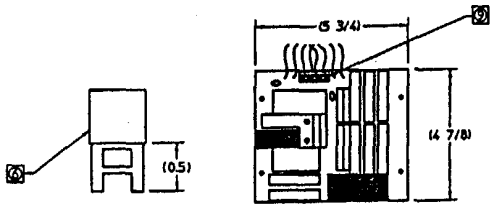

75963-01
P.C. BOARD

14. ALL INDUCTORS TO BE SECURED IN PLACE WITH WIRE TIE AND RTV (SILICONE) UNDER BOBBIN SUPPORT. RTV NOT TO CONTACT WIRE WHERE POSSIBLE.
11. WIRES FROM P.C.B TO TERM CUP TO BE 24".
10. STAMP JBL P/N: 75676 ON CUP WHERE SHOWN.
9. MUST BE KEYED CONNECTOR (CAN ONLY BE CONNECTED ONE WAY).
8. INDUCTORS: ± 5% @ 1 KHZ, DCR < 0.25 OHMS, SATURATION 7A MIN, HYSTERESIS ± 2 %
7. CAPACITORS: 0.01uF ± 10% @ 1 KHZ, D.F. < 2 %, 200V POLYPROPYLENE
ALL OTHERS ± 10% (UNLESS NOTED DIFFERENTLY) @ 1 KHZ, D.F. < 2 %, 200V MYLAR
6. RESISTORS: 10 WATT, NO RTV REQUIRED BETWEEN RESISTORS (MUST BE TWO LEG/FOUR PIN TYPE)
5. NEUTRICK: NL4MP P.C. MOUNT VERSION OF 4 PIN NEUTRICK CONNECTOR (AIR TIGHT)
4. S1 TO BE TWO POSITION ROTARY SWITCH (ON-ON) WIRED FOR 6A MINIMUM RATING BY PARALLELING ONE SWITCH SECTION TOGETHER AS SHOWN.
BA= BI-AMP MODE
FR= FULL RANGE MODE
3. PHONE JACK (1/4" SWITCHCRAFT) TO BE INSULATED FROM TERMINAL CUP. (J1 & J2)
2. TERMINAL CUP TO BE 0.8MM THK STEEL, POWDERCOATED BLACK.
1. TERMINAL CUP SIMILAR IN SIZE ONLY, TO PART NO. 69691-XX.
⊕ OUTWARD CONE MOVEMENT WITH POSITIVE VOLTAGE TO RED INPUT TERMINAL.
⊖ INWARD CONE MOVEMENT WITH POSITIVE VOLTAGE TO RED INPUT TERMINAL.

NOTES: (UNLESS OTHERWISE SPECIFIED)

QTY	ITEM	PART NO.	PART/MATERIAL	REMARKS

BILL OF MATERIAL

TOLERANCES

HARMAN SPEAKER MANUFACTURING
A Harman International Company
Northridge, California 91329 U.S.A.

TITLE: NETWORK ASSY SR4722A

DRAWN: 5/21/93 D.RIVERA

SR4722A

SIZE: D | DRAWING NO. 75963-XX | REV: B

SCALE: NONE | SHEET: 1 of 1