PART NO.	REV	REMARKS
73388	OBS	
73388-01	A	

NMR835

ORD	LTR	DESCRIPTION	DRFT	CHK	DATE	APPR
F-0884	A	RELEASE FOR PROD.	HF		3/5/91	DMR
414P	B	WIRE LENGTH 18" WAS 12"	JLP	J.A.R	4/18/91	D.M.R.
493P	C	CHANGE L1 DCR = 0.3 WAS DCR > 0.25 OHMS	JLP	J.A.R	5/13/91	DR JR
529 P	D	22" WAS 18" GRN/BLK & GRN WIRED	VAL	J.A.R	6/21/91	DR JR
568T	E	REL FOR PROD -01 OBS 73388 ADD NOTE 3, R3 & R4 20W WAS 10	PL	[illegible]	7/18/93	[illegible]

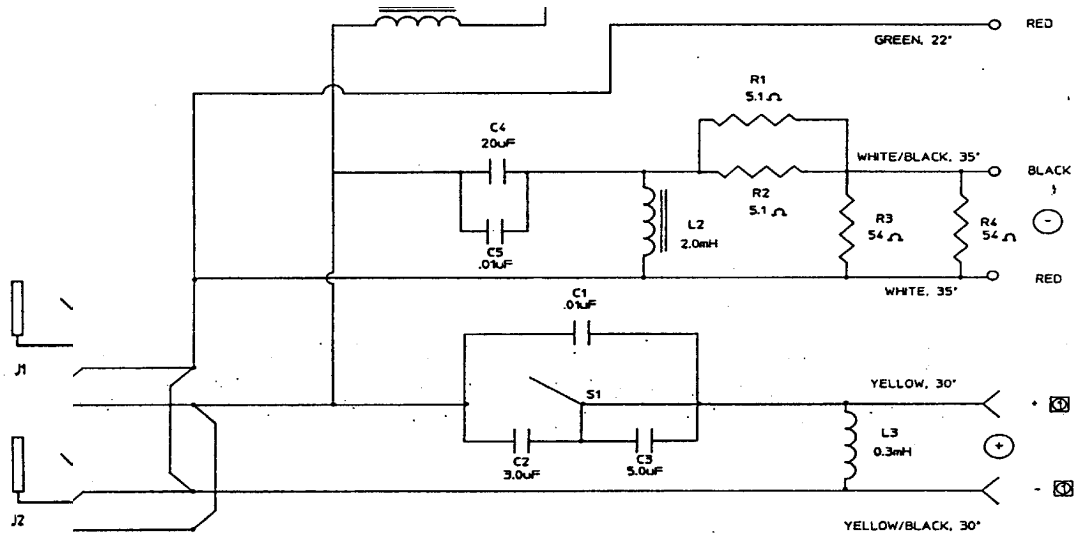

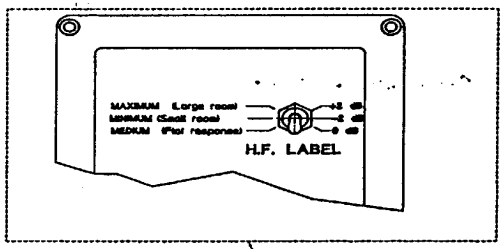

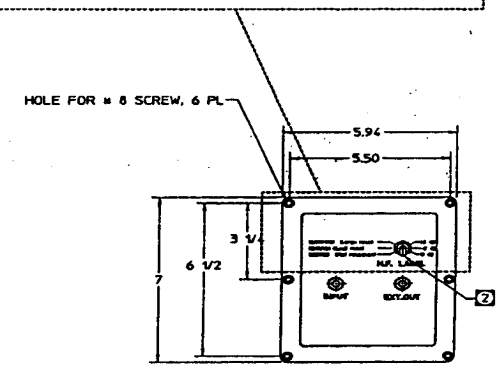

GENERAL SPECIFICATIONS:

(+) OUTWARD CONE MOVEMENT WITH POSITIVE VOLTAGE TO RED INPUT TERMINAL.

C1, C5: 250V POLYPROPYLENE, ±10% @ 1KHz, D.F. < 0.8%.
C2, C3, C4: 250V MYLAR, ±10% @ 1KHz, D.F. < 1%.

L1: ± 5% @ 1KHz, DCR < 0.3 OHMS, SATURATION 7.5A MIN, HYSTERESIS ± 2%.
L2: ± 5% @ 1KHz, DCR < 0.5 OHMS, SATURATION 6.5A MIN, HYSTERESIS ± 2%.
L3: ± 5% @ 1KHz, DCR < 0.5 OHMS.

R1, R2: 10 WATT
R3, R4: 20 WATT
J1, J2: PHONE JACK (P/N 63394).
S1: SPOT, 3A
WIRE: 18AWG

3. ALL RESISTORS TO BE MOUNTED ON BACK OF P.C.B. WITH EYELETS. ALL RESISTORS MUST BE 4 LEGGED TYPE.

[2] WHEN S1 IS POSITION SHOWN, C3 IS TO BE SHORTED OUT AS SHOWN ON SCHEMATIC.

[1] FEMALE TERMINAL FOR .250 X .032 SPADE LUG.

NOTES

ITEM	PART NO.	DESCRIPTION	REMARKS

BILL OF MATERIAL

TOLERANCES UNLESS OTHERWISE SPECIFIED
INCHES
X.XXX ± .005 INCH
X.XX ± .010 INCH
X.X ± .030 INCH

DRAWN BY S.P./HF DATE 2/04/91
ENGINEER A.J. DATE 3/4/91
DEPT DEAN RIVERA DATE 3/3/91
MODEL USED ON NMR835

HARMAN SPEAKER MANUFACTURING
A Harman International Company
Northridge, California 91329, U.S.A.

TITLE NETWORK

SIZE D DRAWING NO. 73388-XX REV E

SCALE NONE SHEET 1 OF 1