JBL Incorporated, 8500 Balboa Boulevard, P.O. Box 2200, Northridge, California 91329 U.S.A.

Technical Manual

JBL MR835

SPECIFICATIONS

ACOUSTIC & ELECTRICAL SPECIFICATIONS:

- Nominal Impedance: 8 ohm
- Power Capacity: Continuous Pink Noise: 250W
Peak Pink Noise: 1000W
- Frequency Range: 38 Hz to 20 kHz (±10dB)
- Sensitivity: 100 dB SPL*
- Crossover Frequencies: 850 Hz, 2.2 kHz

SYSTEM COMPONENTS:

- Cabinet: CMR835
- Grille: 73387
- Low Frequency Transducer: 380mm (15 in.) Cone Transducer 2032H
- DC Resistance: 4.25 ohm ±10% - Aluminum Wire
- Mid Frequency Transducer: 200mm (8 in.) Cone Transducer (2118H)
- DC Resistance: 5.3 ohm ±10% - Copper Wire

*1 Watt (2.83 V RMS) @ 1 Meter

SYSTEM COMPONENTS: *(cont'd)*

- High Frequency Transducer: 25mm (1 in.) Pure Titanium Compression Driver 2416H-1
- DC Resistance: 3.2 ohm ±8% - Aluminum Wire
- Crossover Network: 73388-01

AURAL SWEEP TEST SPECIFICATIONS:

A. System Aural Sweep Test: 7.0V Input, 20 Hz to 20 kHz
B. L.F. Aural Sweep Test: 7.0V Input, 20 Hz to 1.2 kHz
C. M.F. Aural Sweep Test: 7.0V Input, 20 Hz to 1.2 kHz
D. H.F. Aural Sweep Test: 2.83V Input, 550 Hz to 20 kHz

PHYSICAL SPECIFICATIONS:

- Enclosure Dimensions: 714mm x 714mm x 457mm D (28.12 x 28.12 x 18.0 in. D)
- Shipping Weight: 100 lbs. (45.4 kg)

WARRANTY INFORMATION:

- Refer to the Warranty Statement packed with each product.

PACKAGE

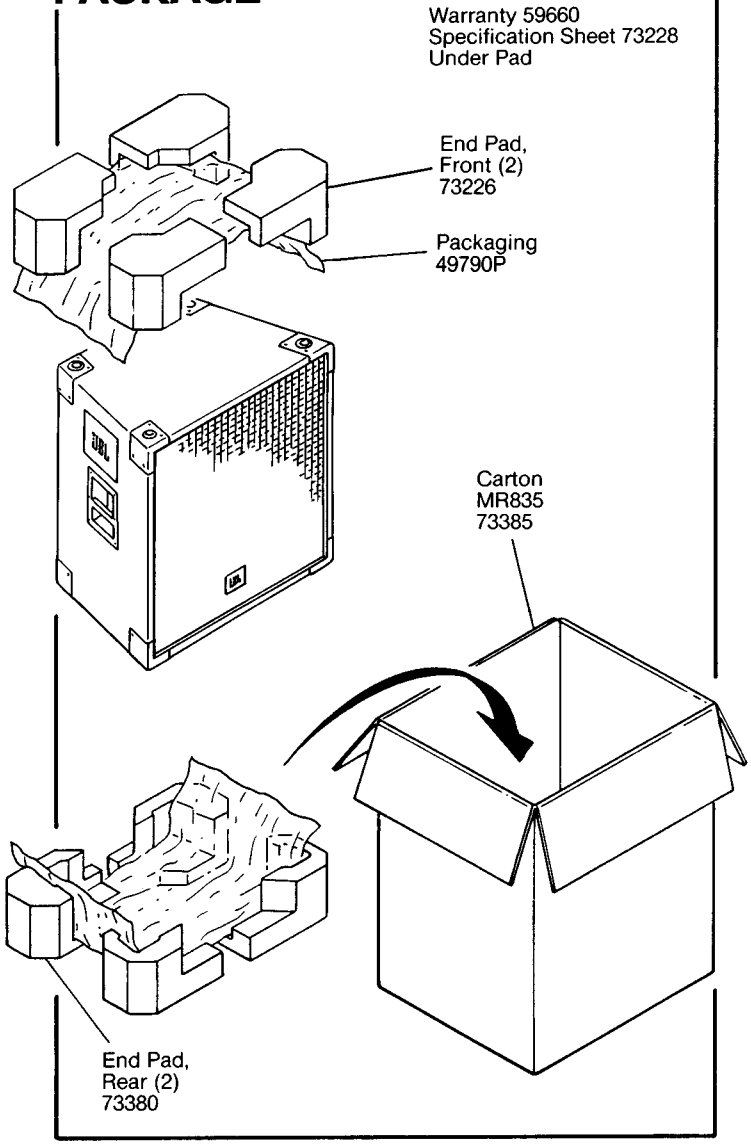

WIRING DIAGRAM

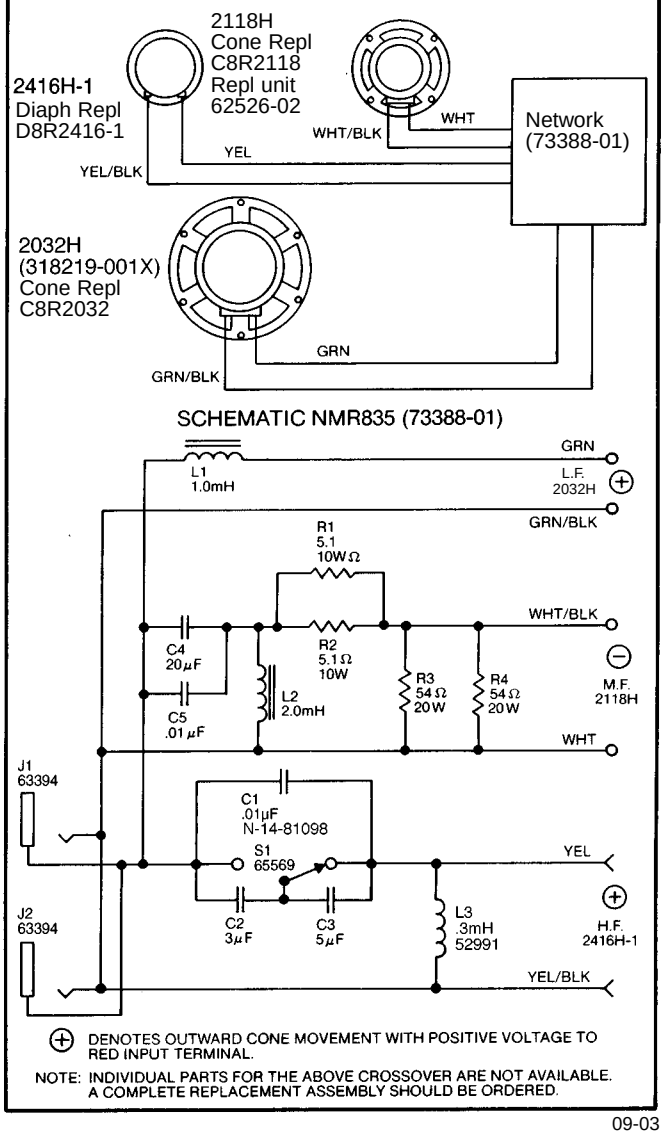

JBL MR835
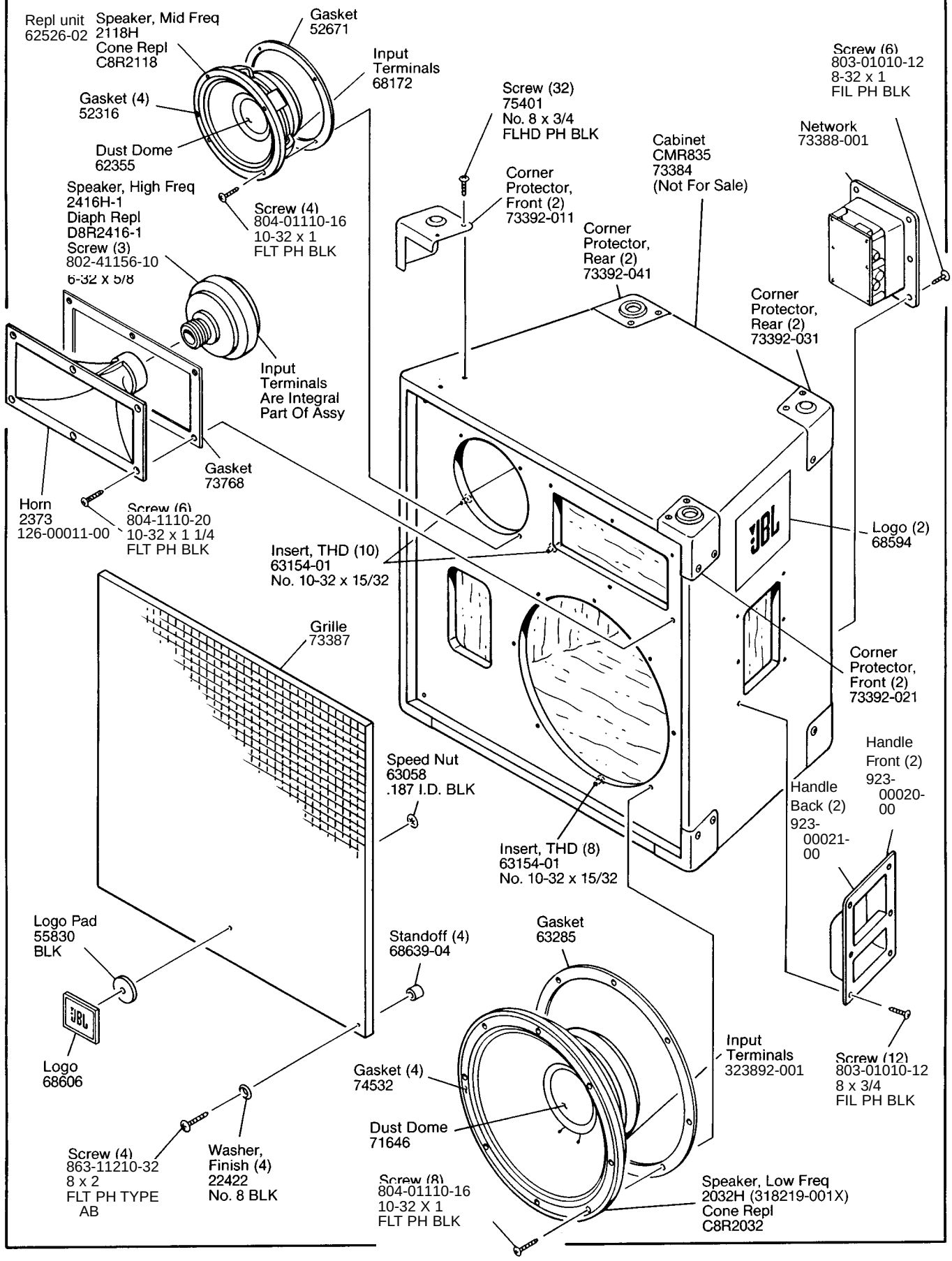
COMPONENT EXPLODED VIEW