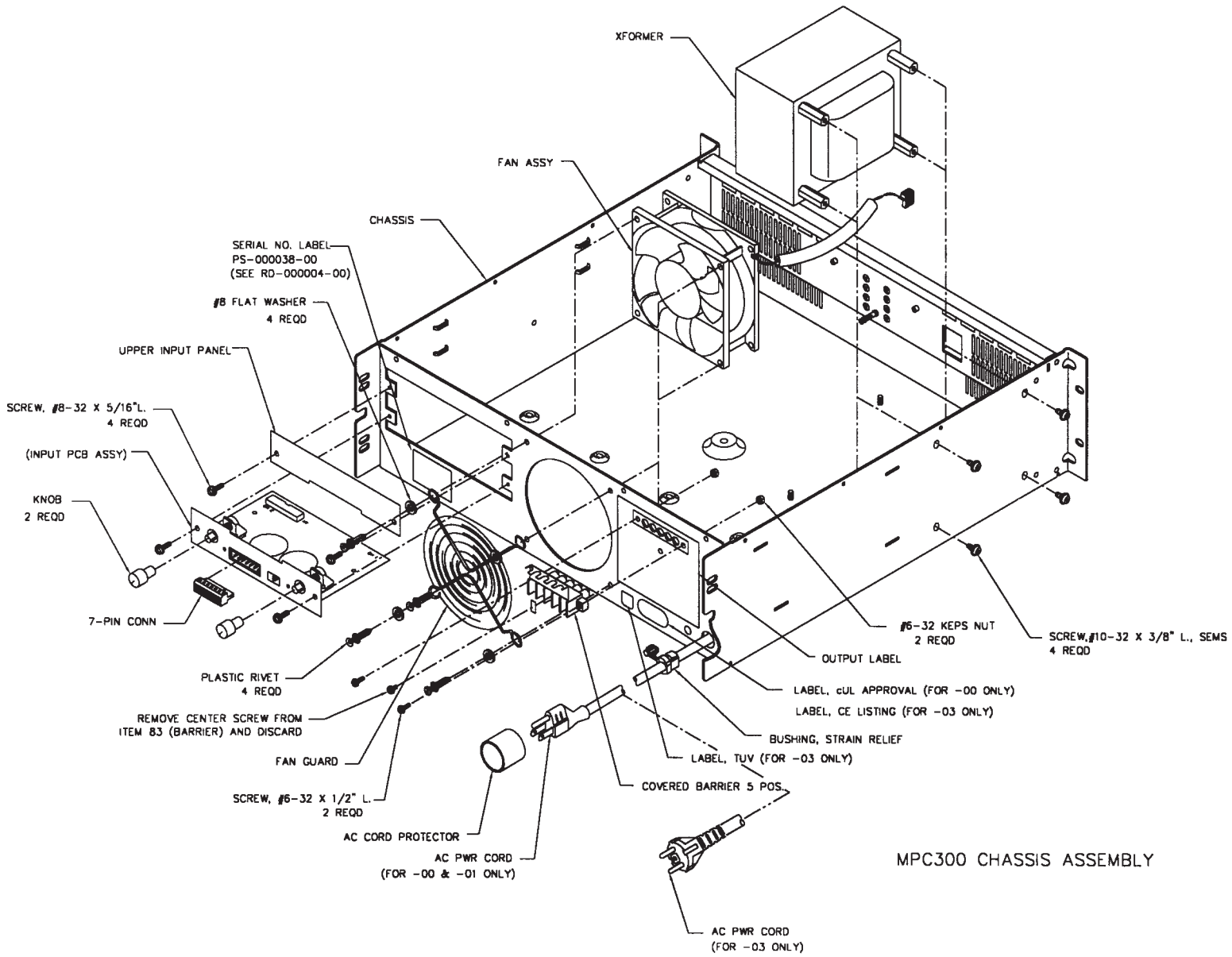

MPC300 CHASSIS ASSEMBLY

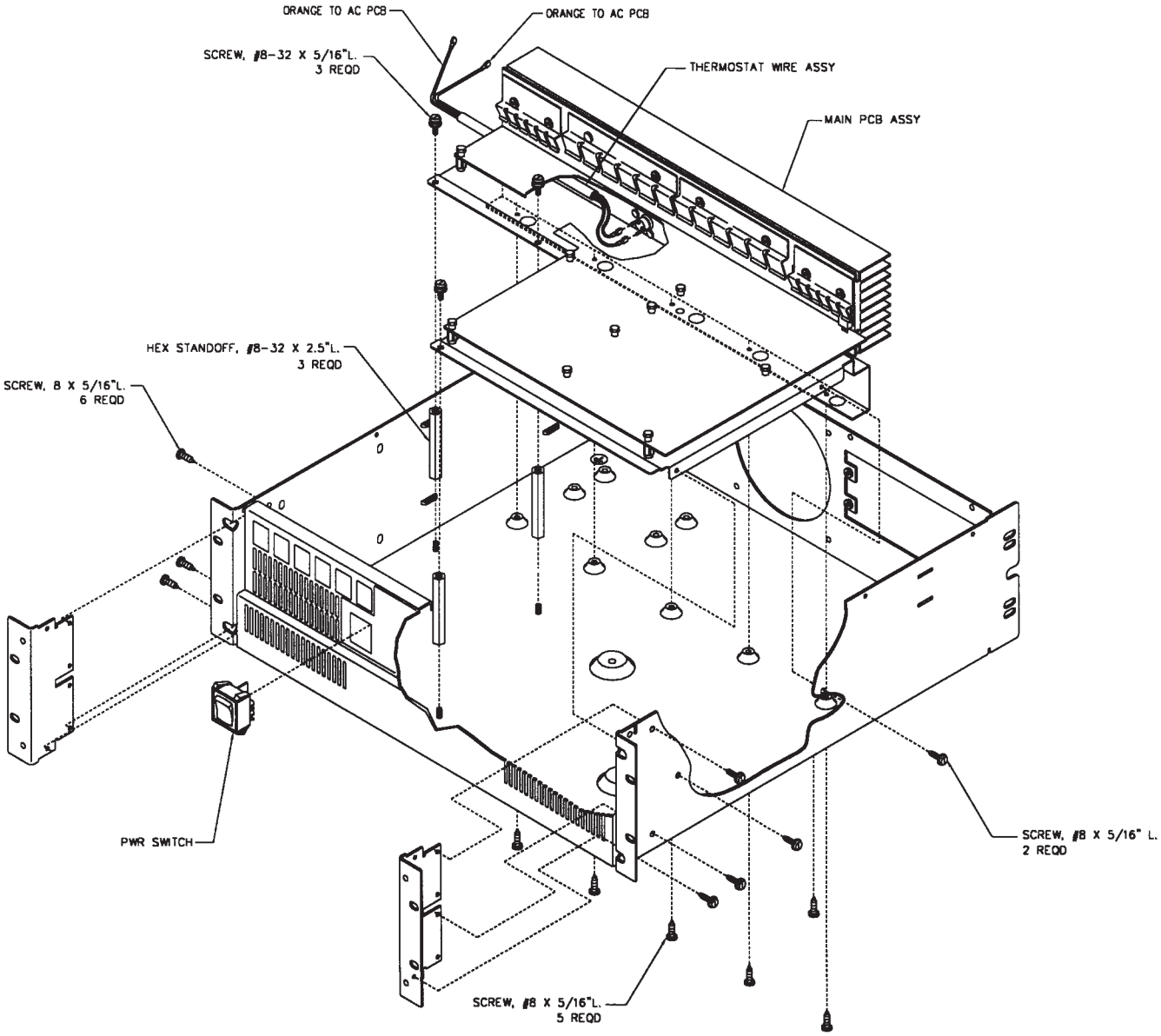
ORANGE TO AC PCB
ORANGE TO AC PCB
SCREW, #8-32 X 5/16"L.
3 REQD
THERMOSTAT WIRE ASSY
MAIN PCB ASSY
HEX STANDOFF, #8-32 X 2.5"L.
3 REQD
SCREW, 8 X 5/16"L.
6 REQD
PWR SWITCH
SCREW, #8 X 5/16" L.
2 REQD
SCREW, #8 X 5/16"L.
5 REQD

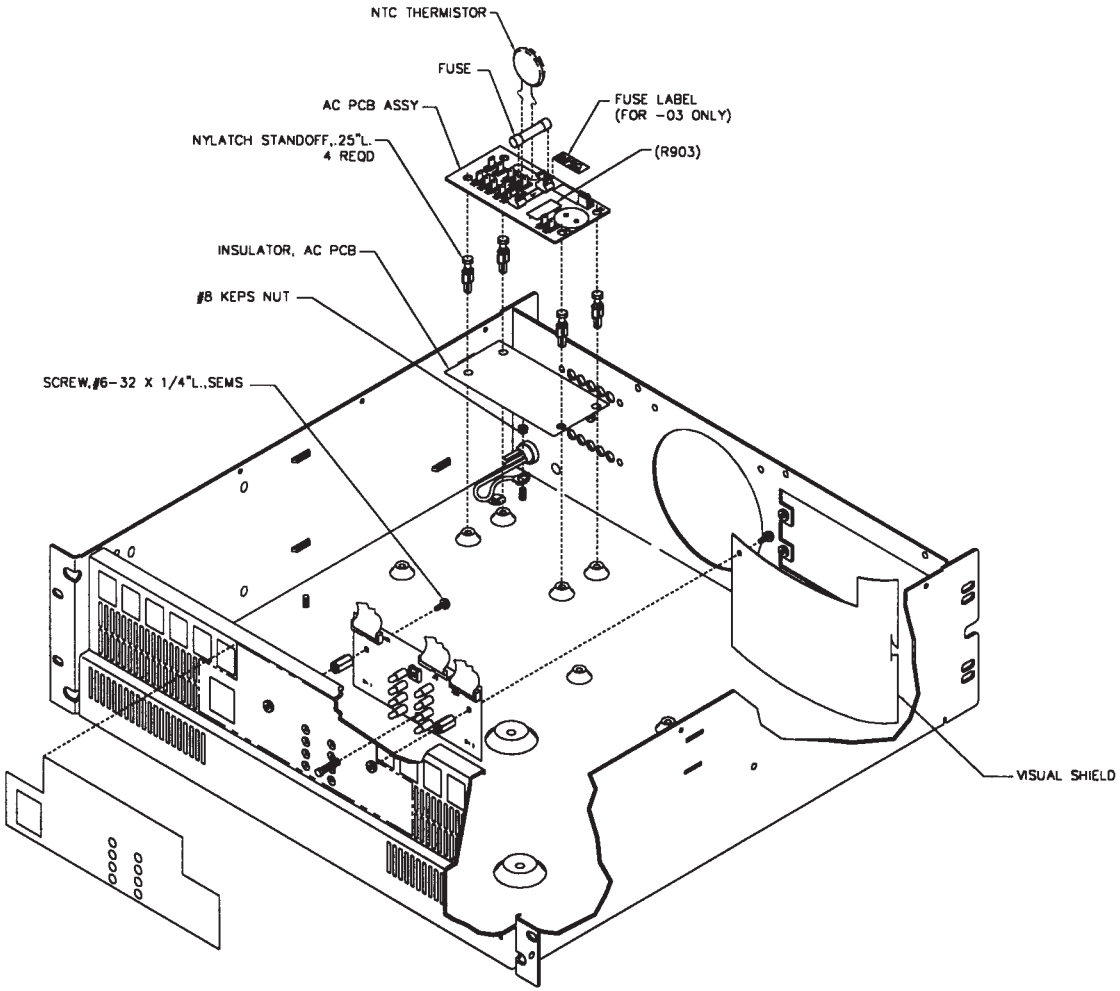
NTC THERMISTOR
FUSE
AC PCB ASSY
NYLATCH STANDOFF,.25"L.
4 REQD
FUSE LABEL
(FOR -03 ONLY)
(R903)
INSULATOR, AC PCB
#8 KEPS NUT
SCREW,#6-32 X 1/4"L.,SEMS
VISUAL SHIELD