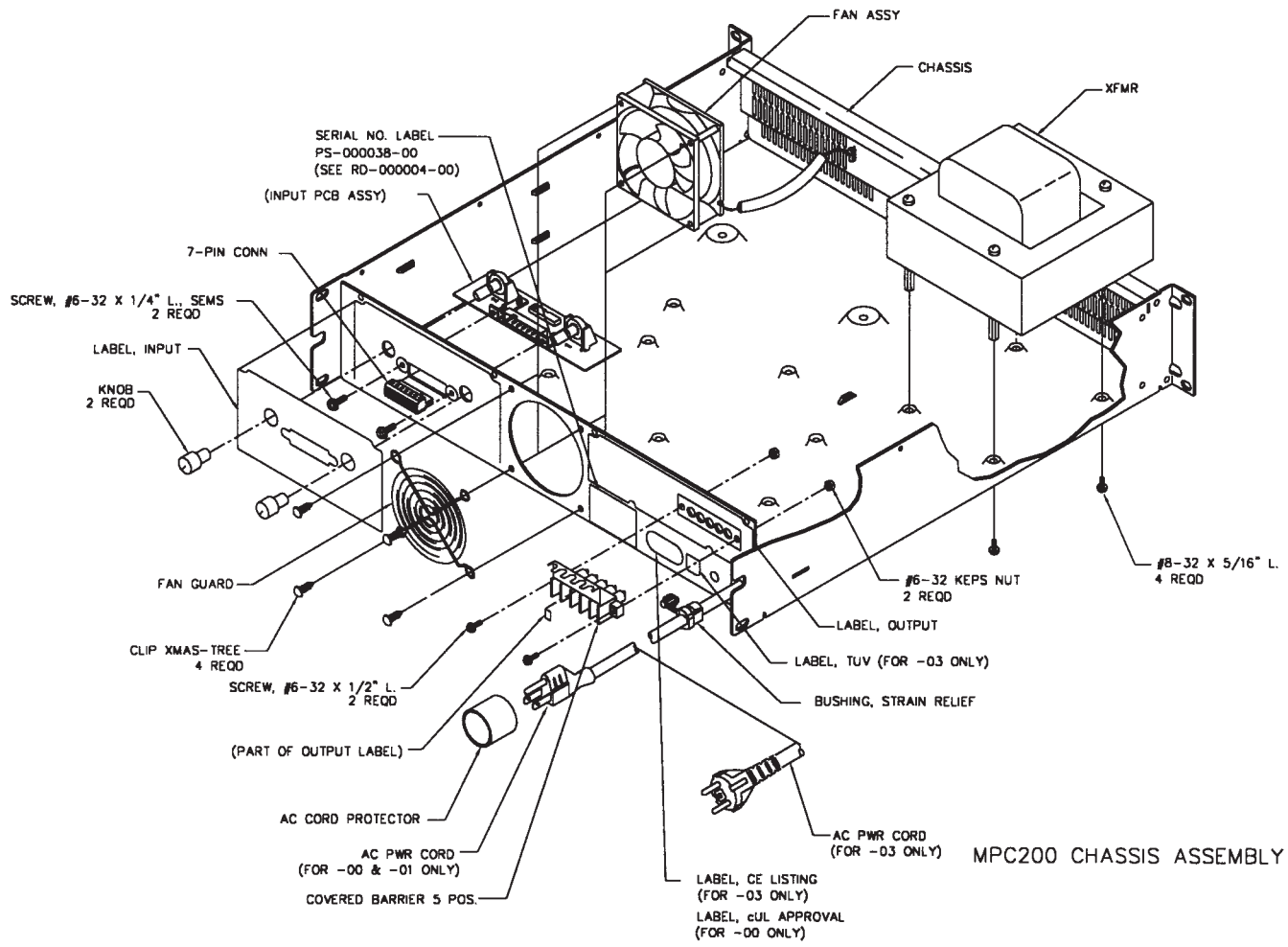

MPC200 CHASSIS ASSEMBLY

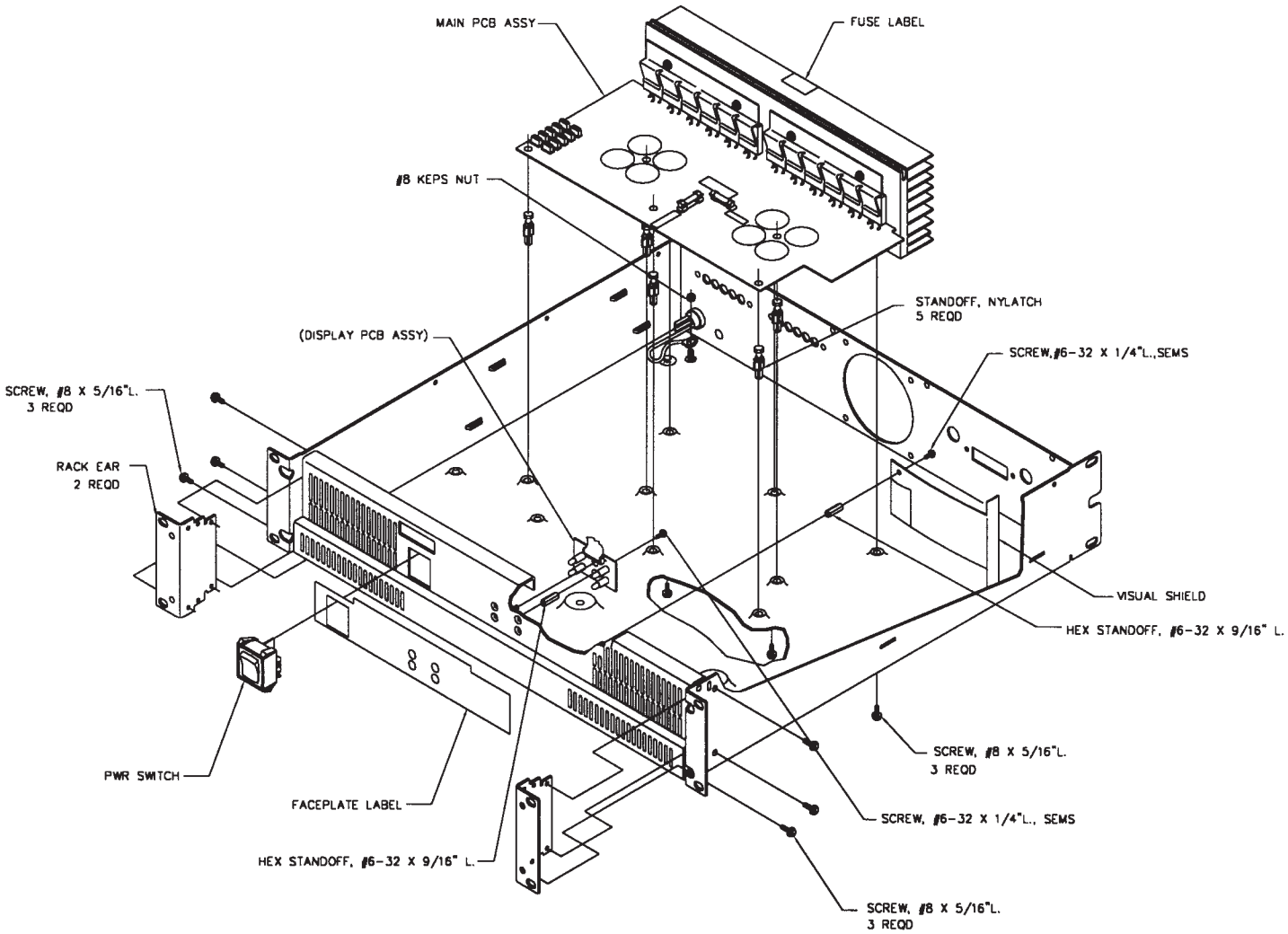
MAIN PCB ASSY
FUSE LABEL
#8 KEPS NUT
STANDOFF, NYLATCH
5 REQD
(DISPLAY PCB ASSY)
SCREW,#6-32 X 1/4"L.,SEMS
SCREW, #8 X 5/16"L.
3 REQD
RACK EAR
2 REQD
VISUAL SHIELD
HEX STANDOFF, #6-32 X 9/16" L.
SCREW, #8 X 5/16"L.
3 REQD
PWR SWITCH
FACEPLATE LABEL
SCREW, #6-32 X 1/4"L., SEMS
HEX STANDOFF, #6-32 X 9/16" L.
SCREW, #8 X 5/16"L.
3 REQD