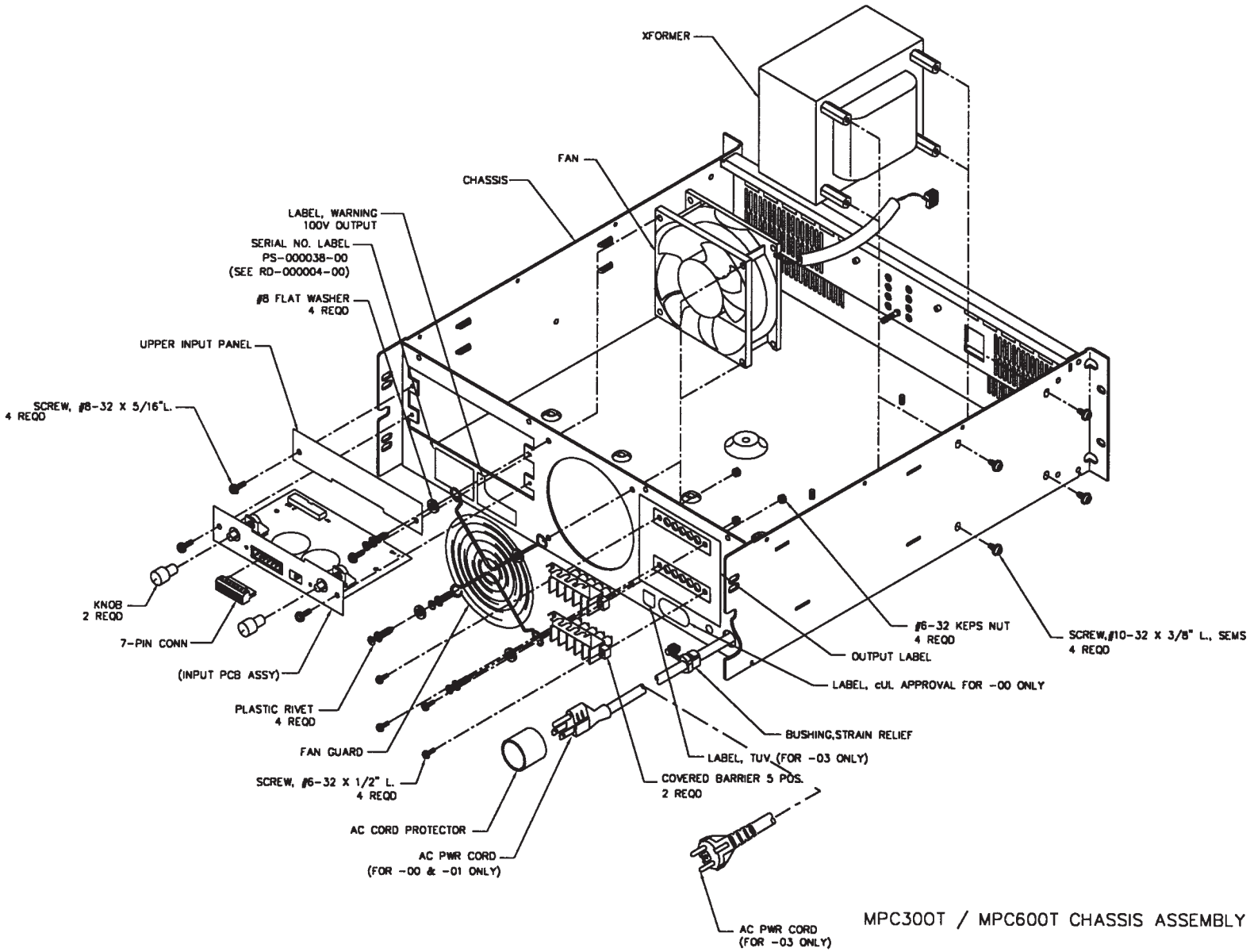

MPC300T / MPC600T CHASSIS ASSEMBLY

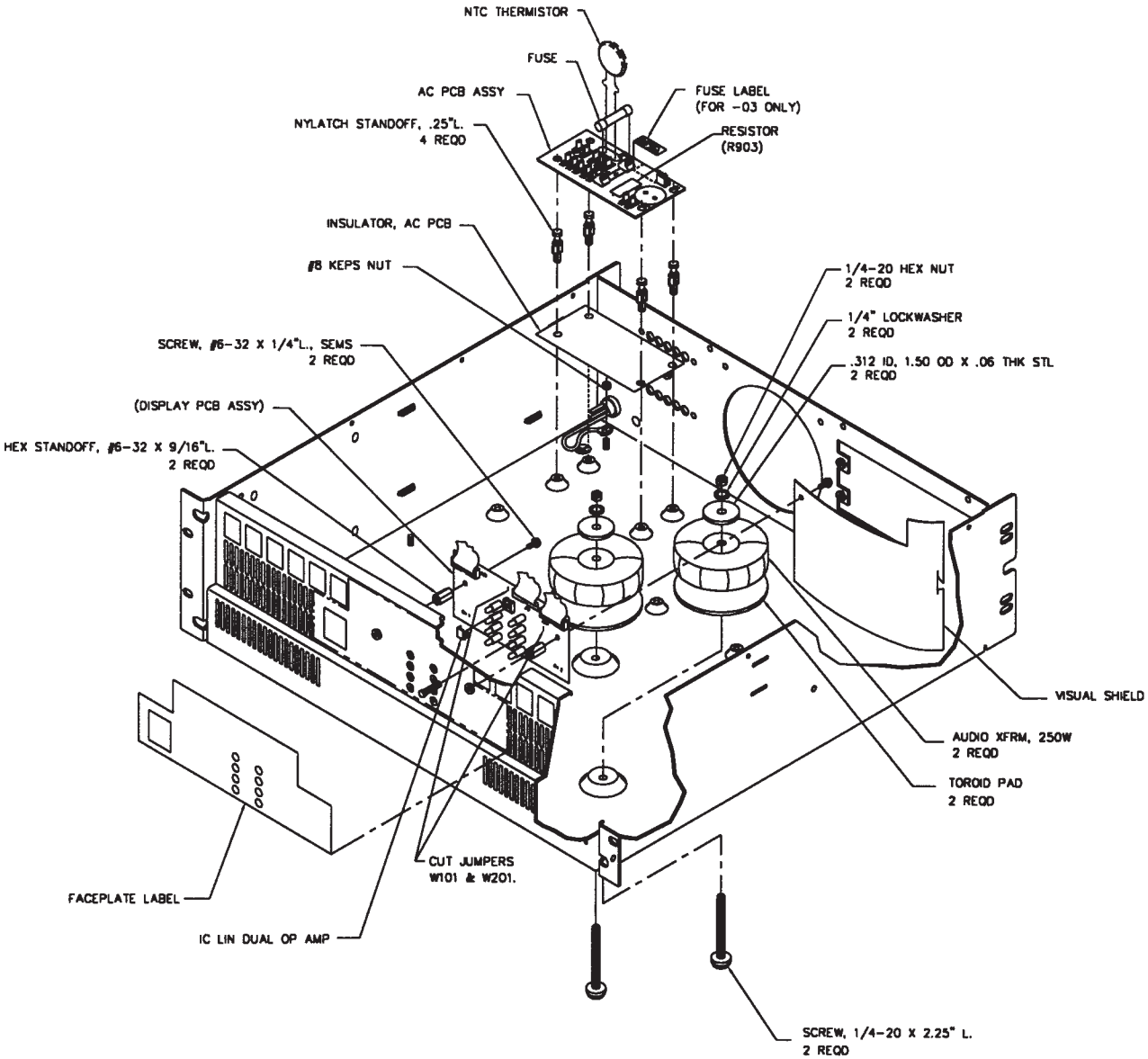
NTC THERMISTOR
FUSE
AC PCB ASSY
NYLATCH STANDOFF, .25"L.
4 REQD
FUSE LABEL
(FOR -03 ONLY)
RESISTOR
(R903)
INSULATOR, AC PCB
#8 KEPS NUT
1/4-20 HEX NUT
2 REQD
1/4" LOCKWASHER
2 REQD
.312 ID, 1.50 OD X .06 THK STL
2 REQD
SCREW, #6-32 X 1/4"L., SEMS
2 REQD
(DISPLAY PCB ASSY)
HEX STANDOFF, #6-32 X 9/16"L.
2 REQD
VISUAL SHIELD
AUDIO XFRM, 250W
2 REQD
TOROID PAD
2 REQD
CUT JUMPERS
W101 & W201.
FACEPLATE LABEL
IC LIN DUAL OP AMP
SCREW, 1/4-20 X 2.25" L.
2 REQD

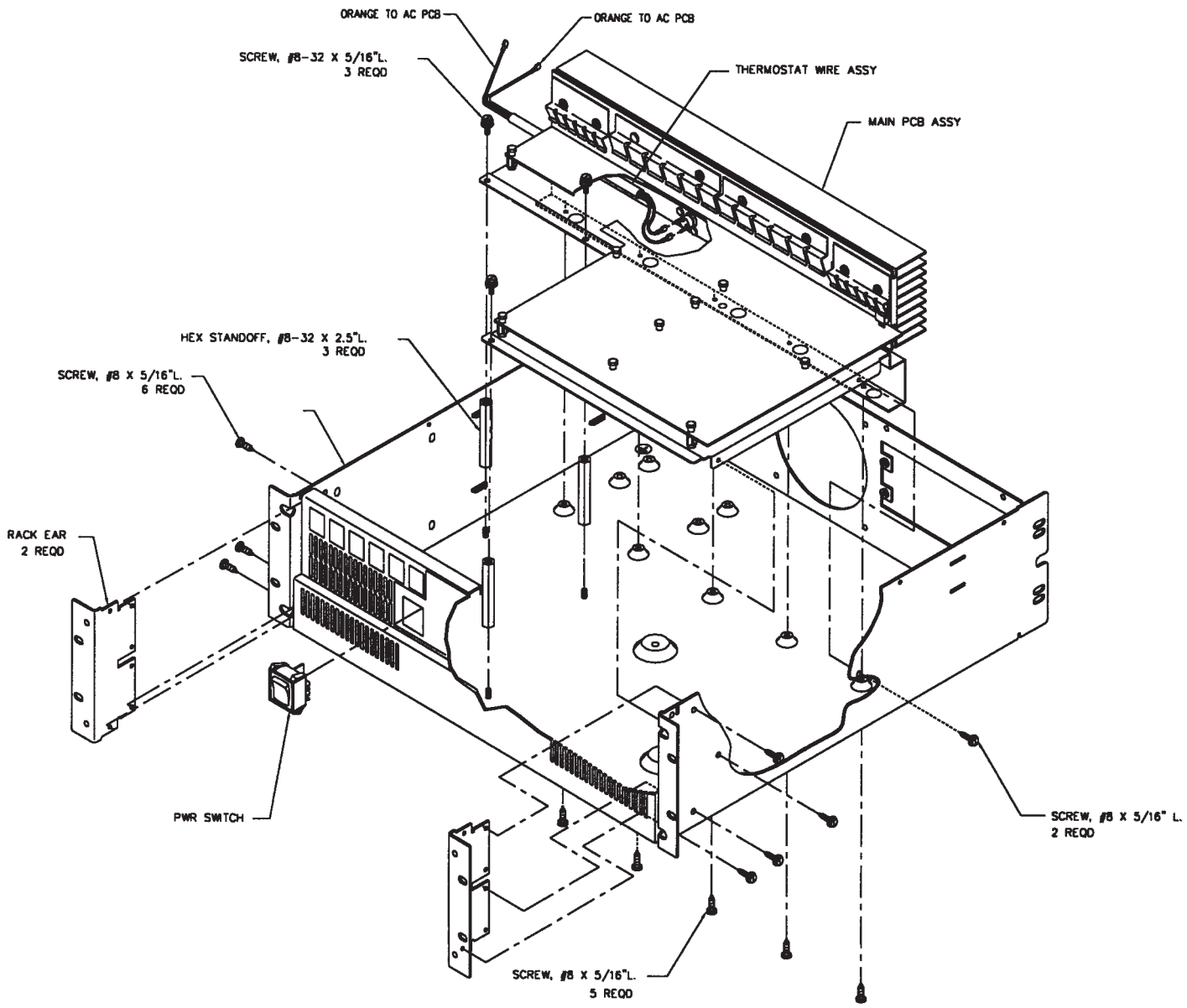
ORANGE TO AC PCB
ORANGE TO AC PCB
SCREW, #8-32 X 5/16"L.
3 REQD
THERMOSTAT WIRE ASSY
MAIN PCB ASSY
HEX STANDOFF, #8-32 X 2.5"L.
3 REQD
SCREW, #8 X 5/16"L.
6 REQD
RACK EAR
2 REQD
PWR SWITCH
SCREW, #8 X 5/16" L.
2 REQD
SCREW, #8 X 5/16"L.
5 REQD