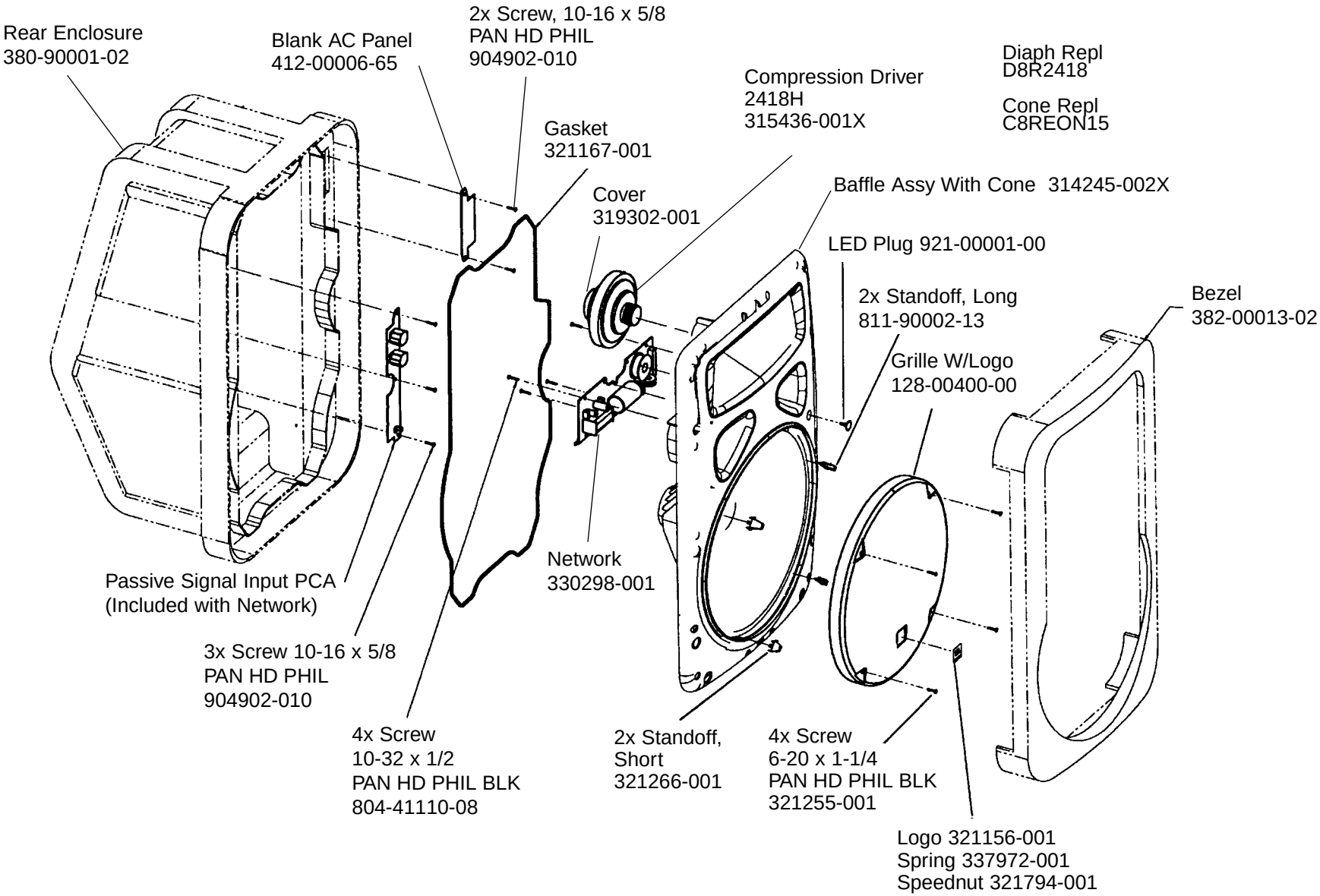Mechanical Assembly EON15