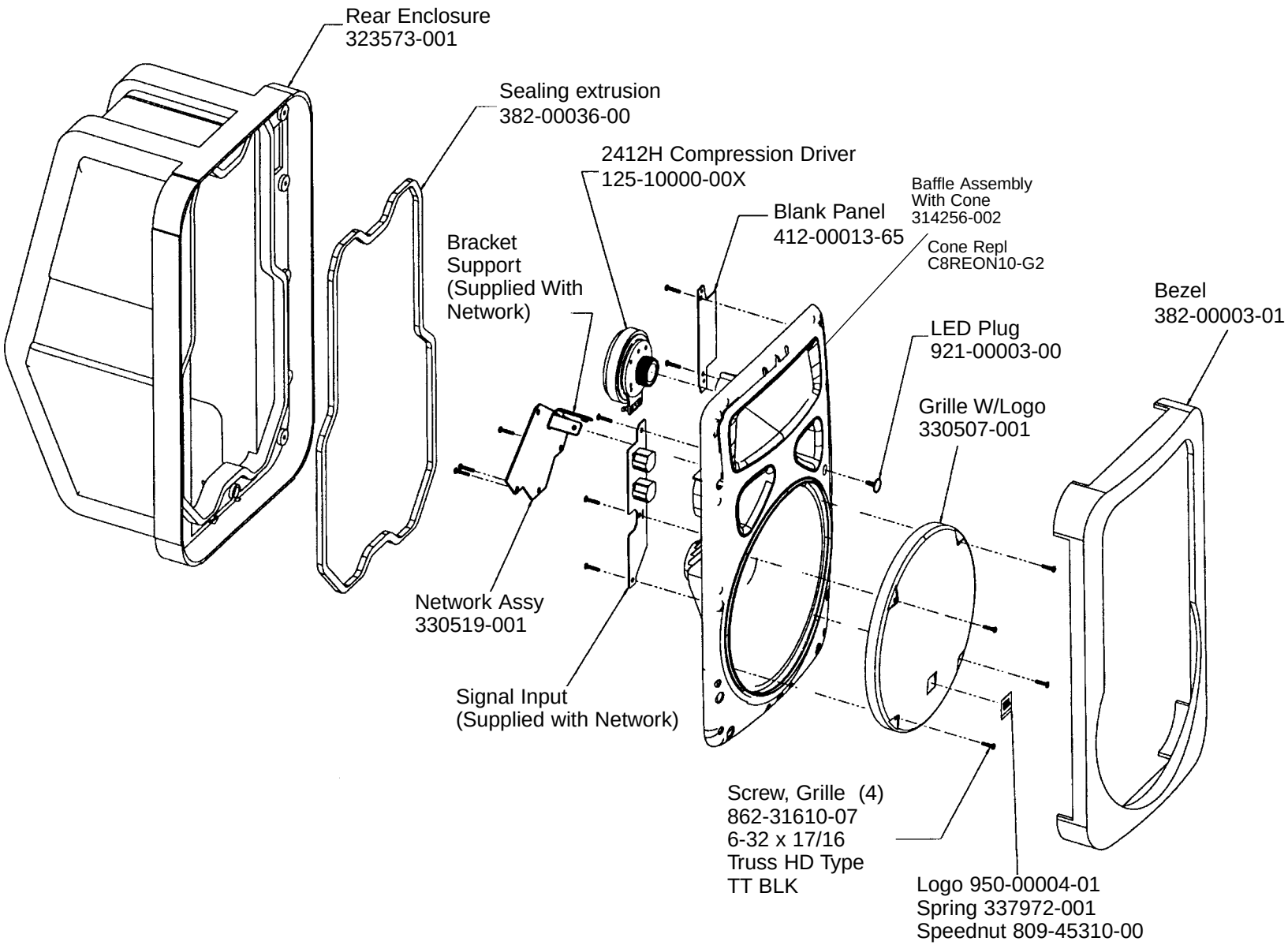Mechanical Assembly EON10