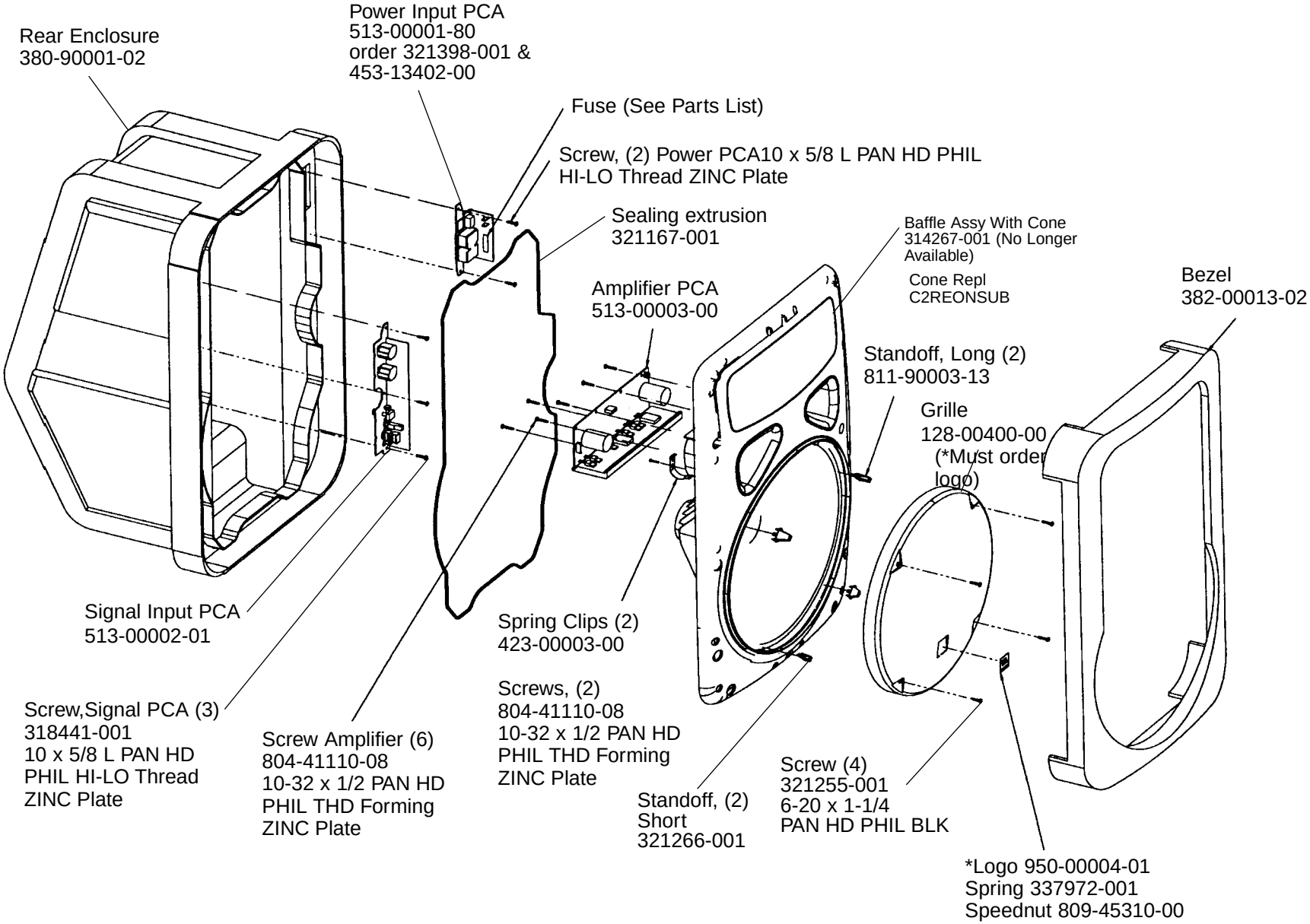Mechanical Assembly EON PowerSub