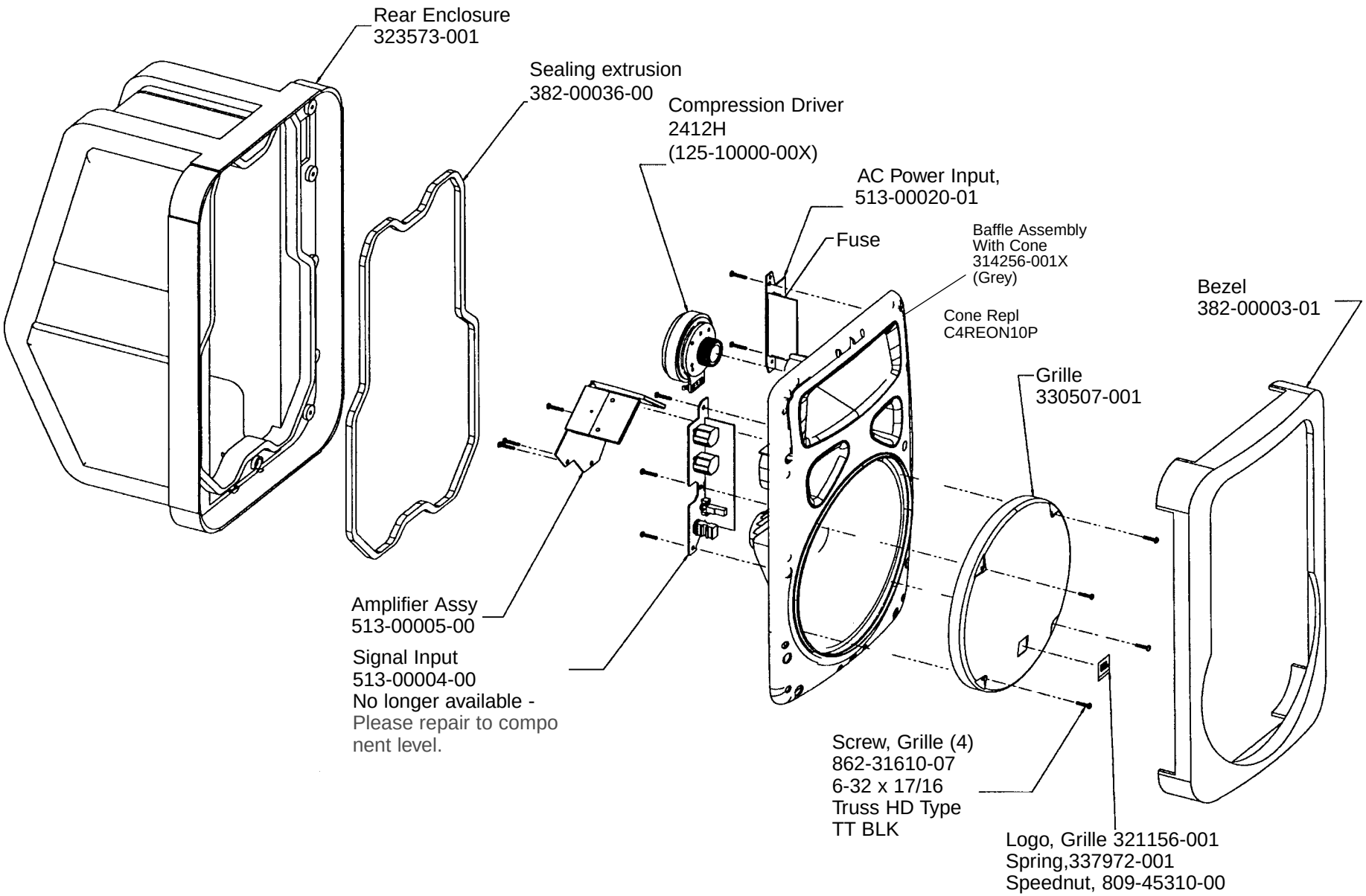Mechanical Assembly EON Power10